HORIZON FIREPLACES

WATER VAPOUR FIREPLACE

INSTALLATION & USER GUIDE

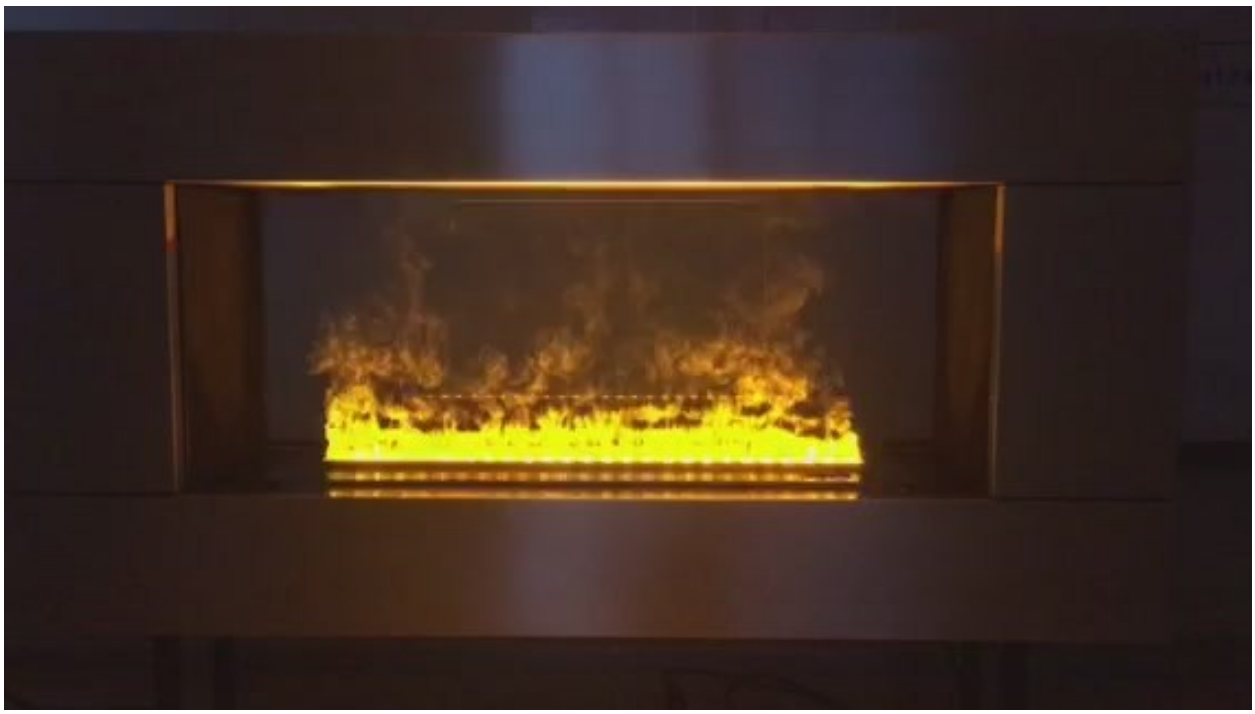

Simple installation. Clean flame effect. No flue required.

Australian edition • For indoor installation • Keep this guide for future reference

INSTALLER NOTE

Read this guide before building the cavity or connecting power. Test the fireplace before it is permanently installed.

1. Before you start

This guide simplifies the key installation, operation and maintenance information supplied with the 3D ultrasonic water vapour fireplace.

THE 5 THINGS THAT MATTER MOST

LEVEL • VENTILATION • POWER • PURE WATER • SERVICE ACCESS

Installation essentials

- Install the unit perfectly level on a flat, stable surface.
- Provide ventilation openings, gaps or channels between the fireplace cavity and the room.
- Allow approximately 500–800 mm clear space above the fireplace effect for the best visual result.
- Use pure/purified water only. Do not use ordinary household tap water.
- Provide access to the power connection, water filling/drain points and removable service components.
- Keep the cavity dry and avoid moisture-prone or highly reflective finishes around the flame-effect zone.

Electrical supply

- Connect to an earthed indoor power supply. The original supplier manual specifies AC 220 V and earth/leakage protection.
- For an Australian installation, any fixed electrical work must comply with applicable Australian requirements and be completed by a suitably licensed person.

DO NOT INSTALL OUT OF LEVEL

An uneven unit can affect water level and atomisation, resulting in an uneven or poor flame effect.







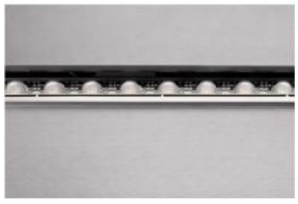

2. Planning the cavity

Use the burner specifications below when preparing cabinetry, stonework or joinery. The current data sheet covers 3D-500t through to 3D-3500t.

Burner specifications

Model	Overall size L x W x H	Cut-out / hole L x W	Tank L	Run time h	Power W
3D-500t	500 x 250 x 225	470 x 230	1.2	4.5	150
3D-600t	600 x 250 x 225	570 x 230	1.5	6	160
3D-700t	700 x 250 x 225	670 x 230	2.5	9	180
3D-800t	800 x 250 x 225	770 x 230	3.5	10	220
3D-900t	900 x 250 x 225	870 x 230	4.5	12	240
3D-1000t	1000 x 250 x 225	970 x 230	5.0	12	260
3D-1100t	1100 x 250 x 225	1070 x 230	6.0	12	290
3D-1200t	1200 x 250 x 225	1170 x 230	7.0	12	310
3D-1300t	1300 x 250 x 225	1270 x 230	8.0	9	330
3D-1400t	1400 x 250 x 225	1370 x 230	9.0	10	350
3D-1500t	1500 x 250 x 225	1470 x 230	10.0	10	390
3D-1600t	1600 x 250 x 225	1570 x 230	11.0	10	410
3D-1700t	1700 x 250 x 225	1670 x 230	11.5	12	430
3D-1800t	1800 x 250 x 225	1770 x 230	12.5	12	450
3D-1900t	1900 x 250 x 225	1870 x 230	13.5	12	470
3D-2000t	2000 x 250 x 225	1970 x 230	14.5	12	510
3D-2100t	2100 x 250 x 225	2070 x 230	15.0	12	530
3D-2200t	2200 x 250 x 225	2170 x 230	16.0	12	560
3D-2300t	2250 x 250 x 225	2270 x 230	17.0	12	580
3D-2400t	2400 x 250 x 225	2370 x 230	18.0	12	600
3D-2500t	2500 x 250 x 225	2470 x 230	19.0	10	620
3D-2600t	2600 x 250 x 225	2570 x 230	20.0	10	640
3D-2700t	2700 x 250 x 225	2670 x 230	21.0	12	660
3D-2800t	2800 x 250 x 225	2770 x 230	21.5	12	700
3D-2900t	2900 x 250 x 225	2870 x 230	22.5	12	720
3D-3000t	3000 x 250 x 225	2970 x 230	23.5	12	750
3D-3100t	3100 x 250 x 225	3070 x 230	24.5	12	770
3D-3200t	3200 x 250 x 225	3170 x 230	25.0	12	790
3D-3300t	3300 x 250 x 225	3270 x 230	26.0	12	810
3D-3400t	3400 x 250 x 225	3370 x 230	27.0	12	830
3D-3500t	3500 x 250 x 225	3470 x 230	28.0	12	850

Specifications reproduced from the supplied 3D Vapor Fireplace Data sheet. Always confirm the model and actual unit before construction. Note: the 3D-2300t row is shown exactly as supplied in the data sheet and should be confirmed before fabrication.

Ventilation

VENTILATION IS REQUIRED

The supplier manual requires ventilation holes/gaps/channels between the installation cavity and the room, and states a ventilation area of 0.2 m² per 1 m² of fireplace area. If the project design differs, obtain written installation guidance before proceeding.

Service access

Design the installation so the fireplace can be lifted out without damaging finished surfaces. Do not permanently trap the appliance behind fixed joinery.

TIMBER FRAME CONSTRUCTION

Frame the opening directly around the burner body so the top lip sits over and is supported by the frame.



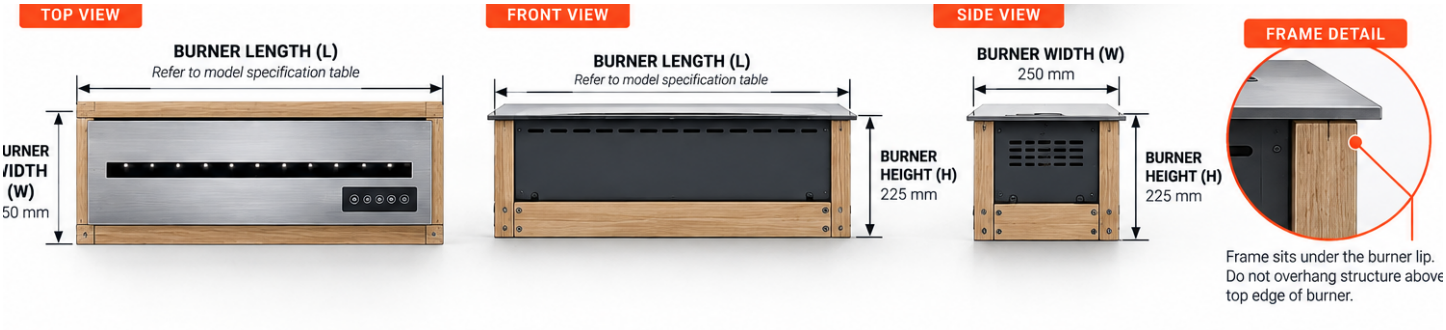

IMPORTANT

The timber frame must remain below the burner lip - do not build the frame above the top edge of the burner.

3. Installation - 6 simple steps

1	**CHECK THE OPENING** Confirm cavity dimensions, ventilation, service access and a flat level support.
2	**CONNECT & TEST** Before final installation, connect power and add enough water to test. Run for about 10 minutes and confirm there are no alarms.
3	**DRAIN BEFORE LIFTING** Drain the internal water before moving the unit into the cavity to reduce leakage risk while tilting.
4	**FIT THE HANDLES** Fit the supplied installation handles securely at both ends of the fireplace.
5	**LOWER INTO POSITION** Slowly lower the unit into the prepared opening. Protect the power lead and connectors from pinching or pulling.
6	**LEVEL & COMMISSION** Check level again, reconnect/fill as required, start the unit and confirm an even flame effect.

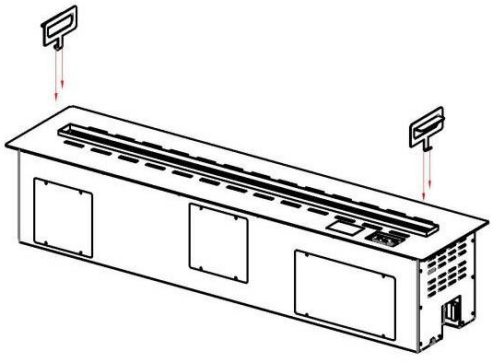

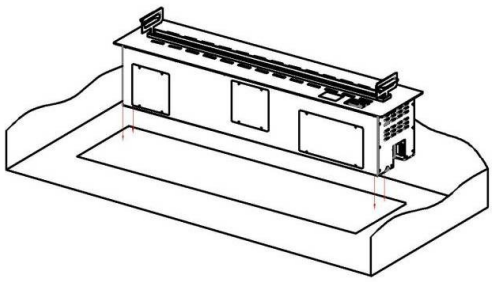

4. Water filling & draining

Filling with purified water

- Locate the two metal ports on the right-hand side of the fireplace.
- Connect the supplied hose to the filling inlet and place the filtered end into a container of purified water.
- Press the fill/pump button. The unit fills automatically and stops when the storage tank reaches its set level.
- Remove the hose carefully and prevent water from dripping into the cavity.



PURE WATER ONLY

The supplier specifically warns against ordinary household tap water. Mineral build-up can reduce performance and may damage internal components.

Draining

- Drain the fireplace before transport, major service or long periods out of use.
- For an installed unit, connect a hose to the outlet/drain port and use the automatic drain function. Press any key to stop when complete.
- For a removed unit, the manual also identifies manual drainage valves for the storage tank and atomising tank.

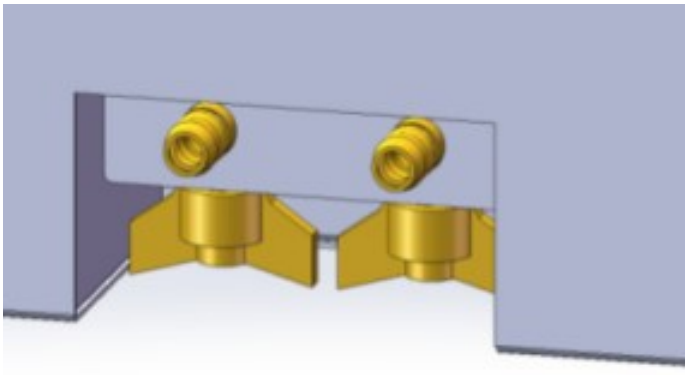

5. Controls & everyday use

The fireplace can be operated from the appliance control panel and, depending on model, the remote control.

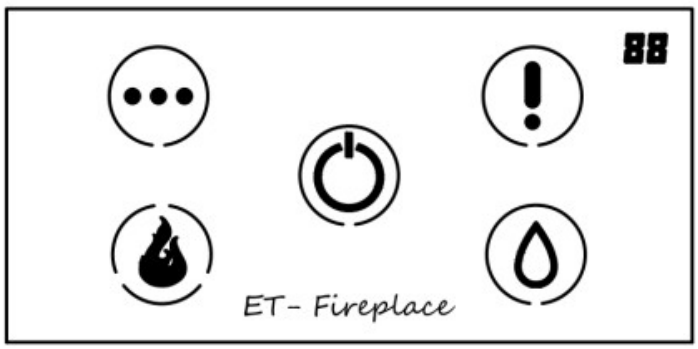

CONTROL	WHAT IT DOES
Power	Starts the fireplace and automatic start-up sequence.
Fill / water drop	Starts automatic filling; filling stops automatically when full.
Atomisation / flame	Cycles through flame/atomisation levels 1–2–3.
Alarm / child lock	Alarm indicator illuminates on a fault. In standby, hold for 3 seconds to activate/deactivate child lock.
Multi-function •••	In standby, hold for 10 seconds to start draining; press any key to stop. Also used for the firewood sound function on applicable models.

Start-up

A normal start-up takes approximately one minute before the atomised flame effect appears. If the atomising tank is below its low-water level, the unit may fill first.

CHILD LOCK

Useful for display homes, showrooms and family areas. Activate it while the unit is in standby by holding the alarm/lock control for 3 seconds.

6. Fault codes & maintenance

Fault codes

CODE	DESCRIPTION
E0	Low water level in atomising tank
E1	High water level in atomising tank
E2	Overflow in atomising tank
E3	High water level in storage tank
E4	Overflow in storage tank
E5	Atomising tank did not reach low-water level within 5 minutes of filling

Multiple fault codes may cycle on the display. The supplier manual states that a code clears automatically once the fault condition is relieved.

Maintenance

- Clean inside the atomising box approximately every 3–4 months.
- Use purified water to minimise deposits and maintain flame performance.
- If the fireplace will not be used for an extended period, drain the internal water and switch off the main power supply.
- If flame performance deteriorates or a fault remains, contact the supplier/service agent. Do not dismantle or modify the fireplace without authorised guidance.

STOP IF WATER IS LEAKING

Switch the unit off and isolate power before investigating a leak or overflow. Do not continue operating a unit with an unresolved water fault.

7. Installer handover checklist

Complete these checks before handing the fireplace over to the customer.

- ☐ Fireplace is installed level and stable.
- ☐ Cavity ventilation openings are complete and unobstructed.
- ☐ Power connection is accessible and protected from water.
- ☐ Power lead is not pinched, stretched or damaged.
- ☐ Service access allows the appliance to be removed if required.
- ☐ Purified water has been used.
- ☐ Automatic fill function operates and stops correctly.
- ☐ Unit has been run and flame effect is even across the opening.
- ☐ No active E0–E5 fault codes are displayed.
- ☐ Customer has been shown power, fill, flame level, child lock and drain controls.
- ☐ Customer has been told to clean the atomising box every 3–4 months and drain the unit before extended non-use.

KEEP THIS GUIDE

Leave this guide with the owner. Product specifications and controls can vary by model; the actual appliance supplied takes precedence.

IMPORTANT AUSTRALIAN NOTE

This simplified guide is based on the supplied manufacturer documentation and has been rewritten for clearer Australian use. It does not replace project-specific electrical, building or regulatory requirements. Where the installation is unusual, obtain written technical guidance before construction.

Document version: Draft AU 1.0 • September 2026